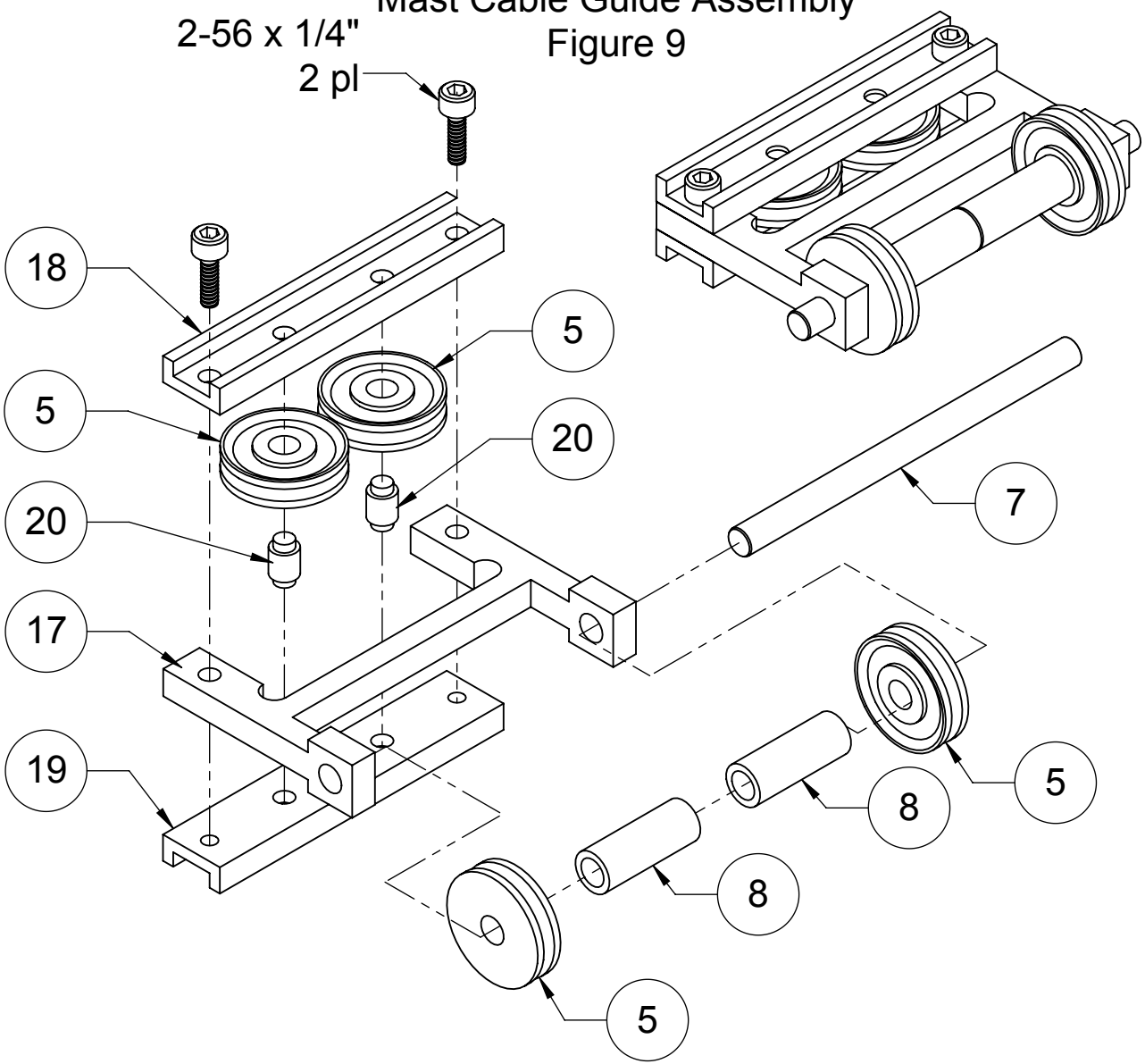Mast Cable Guide Assembly
Figure 9