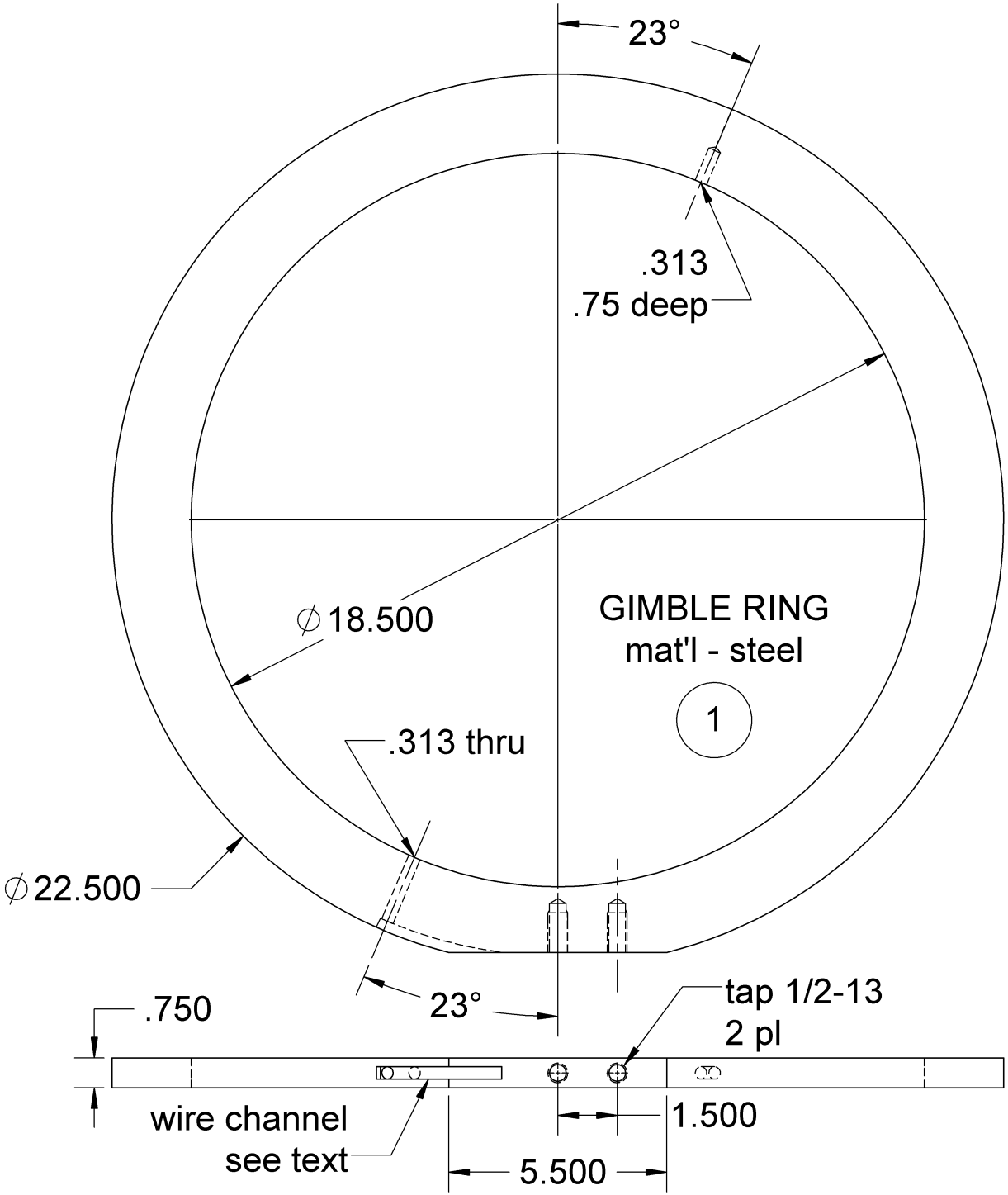
23°
.313
.75 deep
∅18.500
GIMBLE RING
mat'l - steel
1
.313 thru
∅22.500
23°
.750
tap 1/2-13
2 pl
wire channel
see text
1.500
5.500