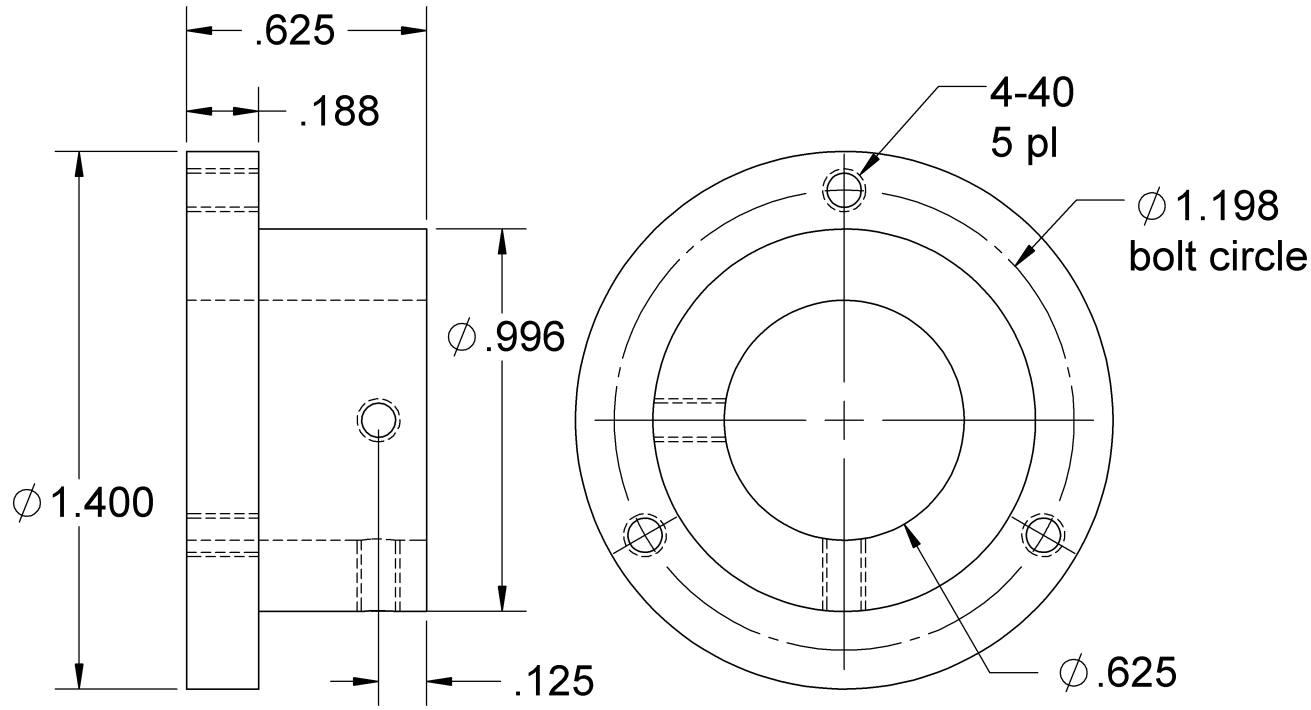

50 SWING PULLEY HUB
mat'l - aluminum