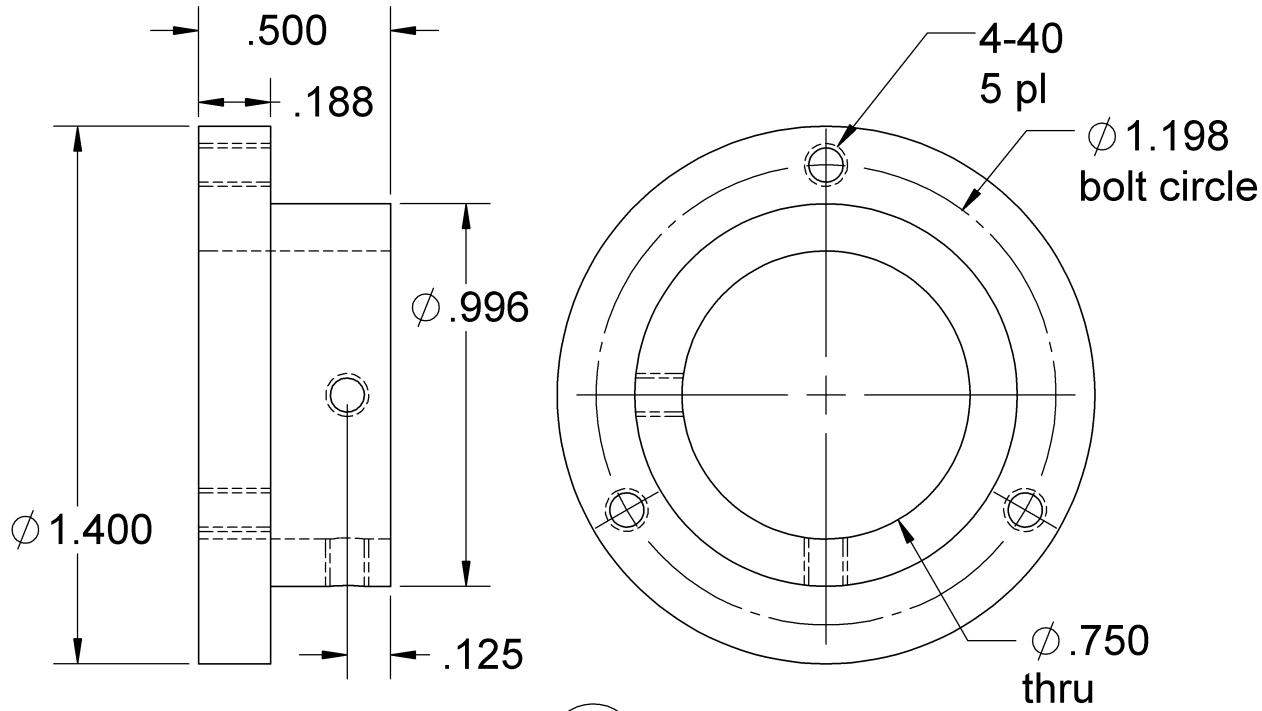

48 MAIN SHAFT HUB
mat'l - aluminum
2-6 req'd (see text)