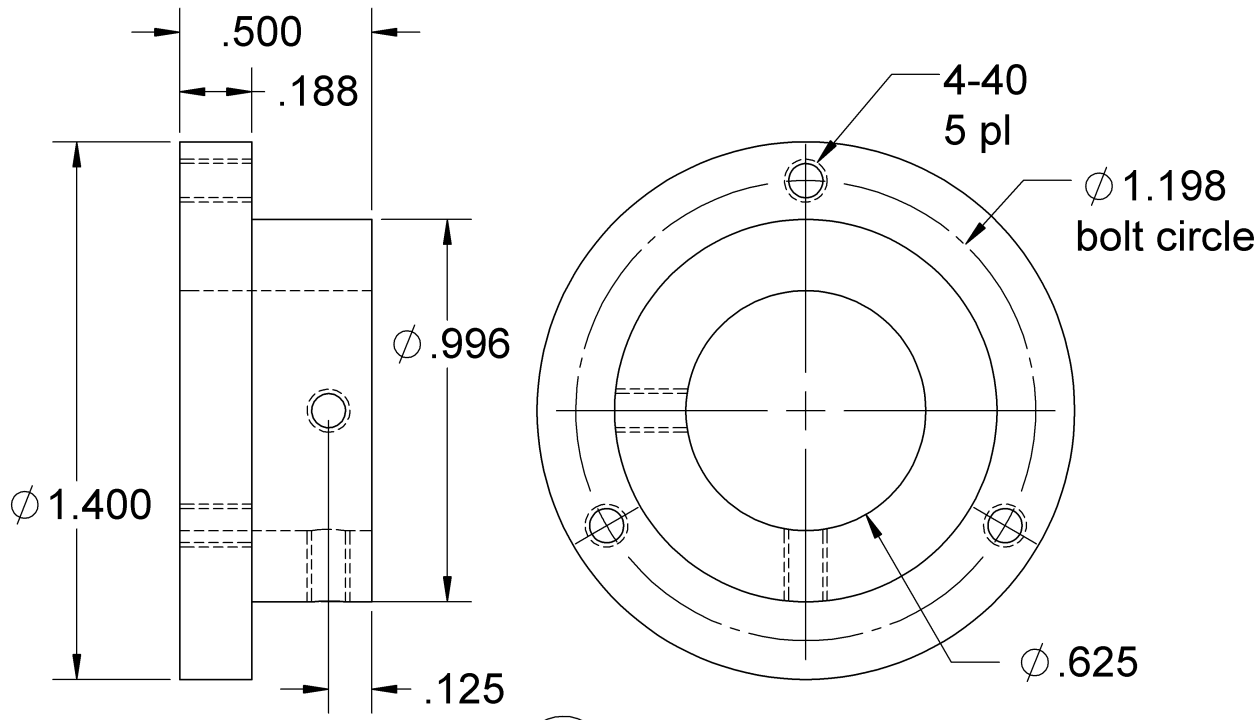

49 CAM SHAFT HUB
mat'l - aluminum
4 req'd