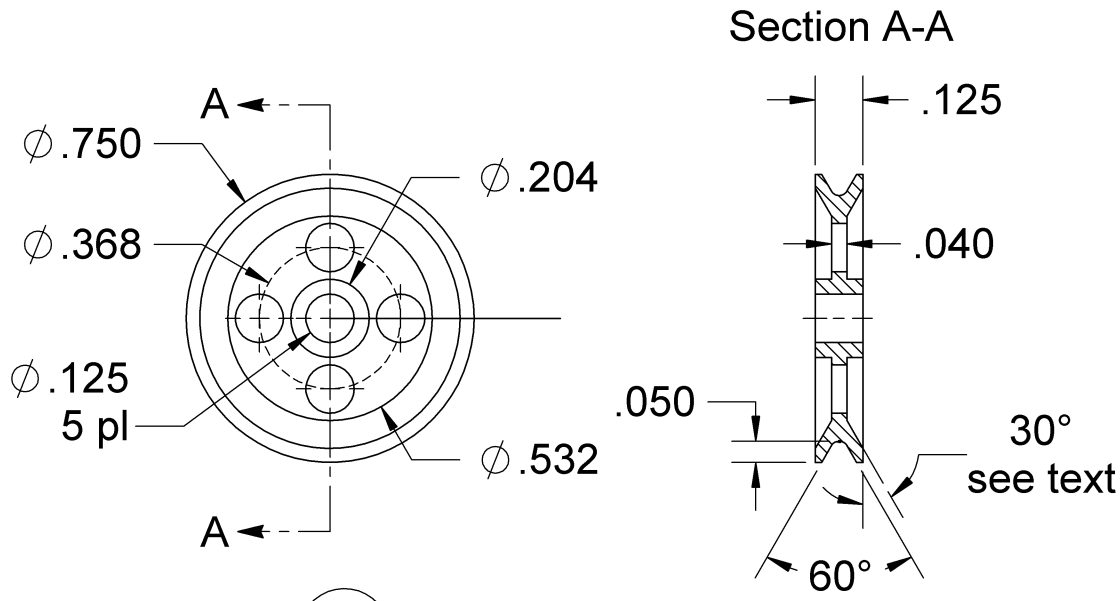

4 LARGE PULLEY
mat'l - brass