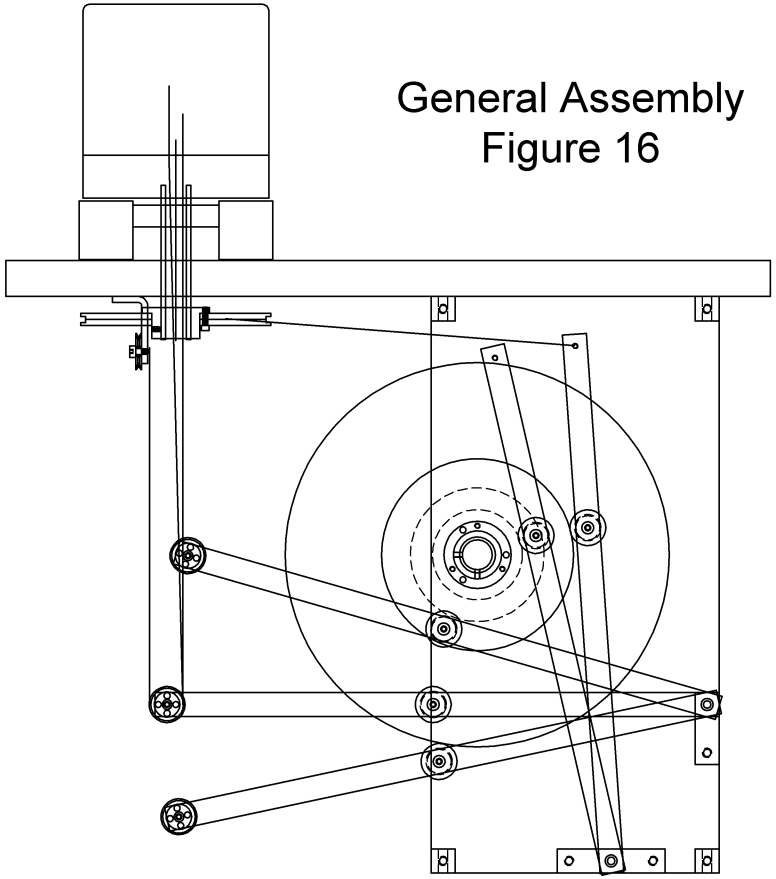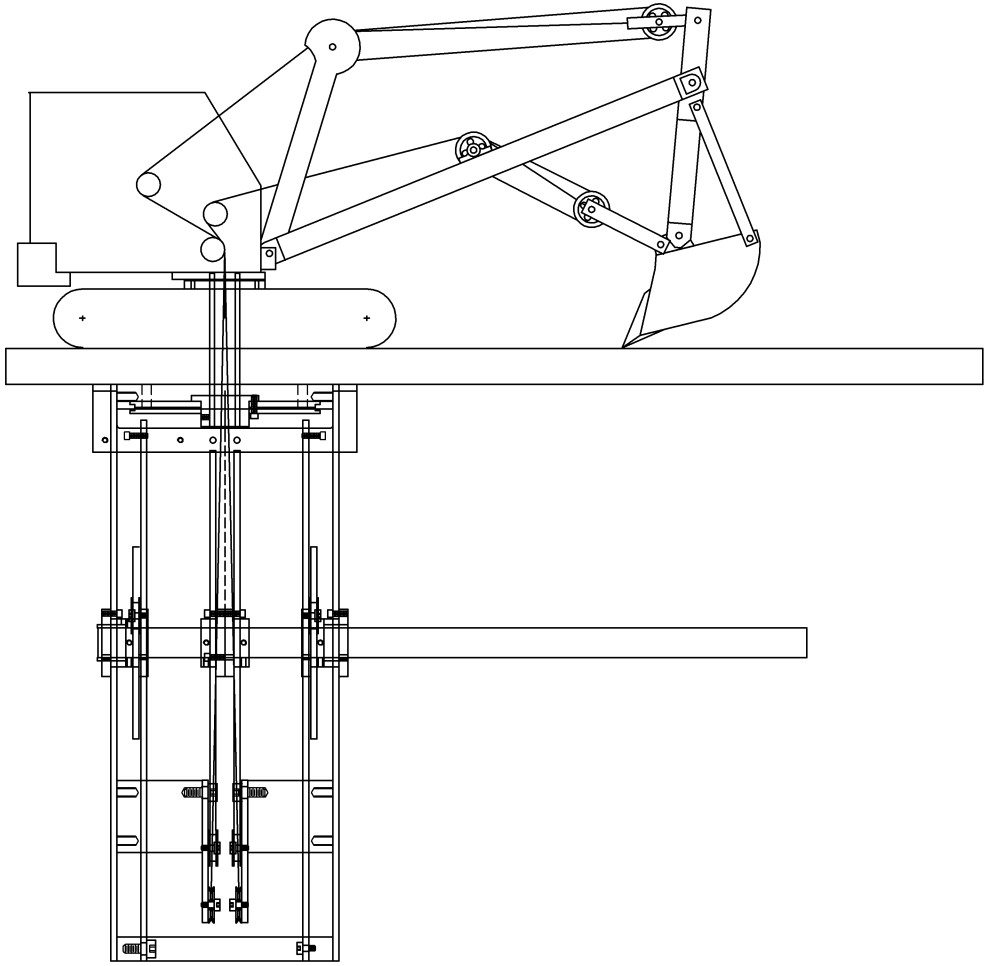General Assembly
Figure 16